NAVILE cap

colors:
black white red stainless steel

NAVILE cap

Capsule coffee machine for home and office appliance.

Technical features

- Capsule coffee machine
- Sliding door brewing group with hydraulic closure and with discharge valve (SH) or solenoid valve drain (SH LV)
- Pre-infusion (only SH LV version)
- CDS system that allows complete monitoring of the extraction phases
- Automatic ejection of the exhausted capsule
- 2 doses and 7 temperature levels settings
- 4 level stand-by setting
- 2 works surface heights

Available Versions

- NAVILE cap SH
  SH with plastic main body
- NAVILE cap SH LV
  SH with plastic main body
- NAVILE cap M SH
  with metal main body
- NAVILE cap M SH LV
  with metal main body

Dispenseable capsules:

- Lavazza Espresso Point/FAP
- Lavazza A Modo Mio/Firma
- Lavazza Blu
- Nespresso
- Caffitaly
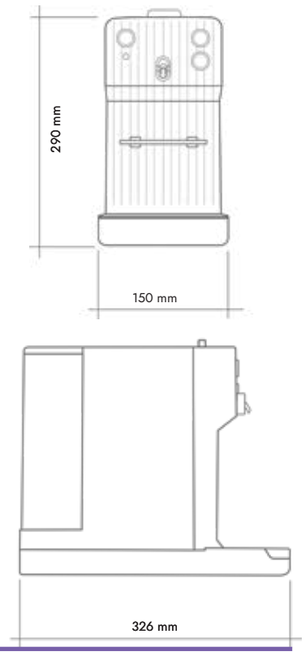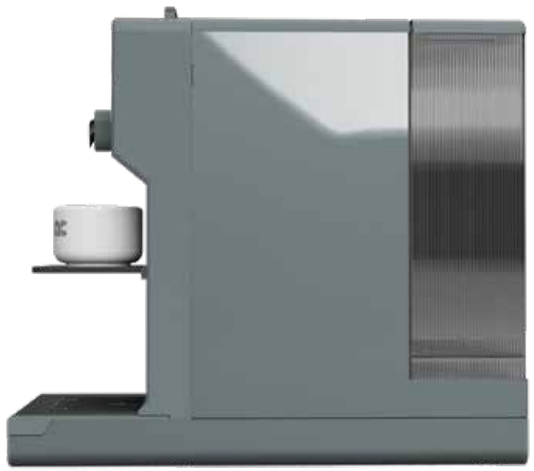
Groups	Model	Control	Electric Heater	Voltage	Tank	Weight
1	NAVILE cap	A	1.450 W	220-240 V 50-60 Hz	2 L	3,5 Kg
1	NAVILE cap M	A	1.450 W	220-240 V 50-60 Hz	2 L	4,5 Kg